COSENTINO®

Types of Fixing

DKS

DEKTON®

Subframe and Fixing Systems

Index of fixing system

DKT1

DKT1
Hidden mechanical fixing using undercut screws on the reverse side of the piece.

DKT2

DKT2
Hidden mechanical fixing with metallic profile on the continuous groove on the edge of the piece.

DKT3

DKT3
Hidden mechanical fixing with clips at intervals along the groove on the edge of the piece.

DKT4

DKT4
Mechanical fixing using visible clips to hold the pieces.

DKBG

DKBG
Mixed fixing (mechanical plus chemical) hidden in the groove on the reverse side of the piece

DKC

DKC
Chemical structural fixing of pieces onto profiles.

DKB

DKB
Pieces are fixed directly to supporting wall using mainly cement based adhesives.

DKS

DKS
Fixing of pieces onto an external thermal insulation system (ETIS)

Private house in La Cinglera, Girona, Spain.

DKS

ETICS/EIFS System

In our fast-moving world, homes undergo multiple refurbishments for aesthetic and decorative reasons as well as to create warmer indoor environments. The DKS system is an ETICS (External Thermal Insulation Composite System) finishing solution.

On an ETICS that is ready to be finished with cladding, Dekton is applied using a suitable cement based adhesive. Because the pieces are adhered to the finished reinforced layer of the insulation system, there is a limit to the weight and format, which must be indicated by the ETICS supplier. The product and application instructions of the ETICS supplier must be followed to fully guarantee the application.

.

Fixing pieces of an external thermal insulation (ETICS) project of high energy-efficiency.

DKS SYSTEM | DIAGRAM

DKS - Diagram

Starting profile

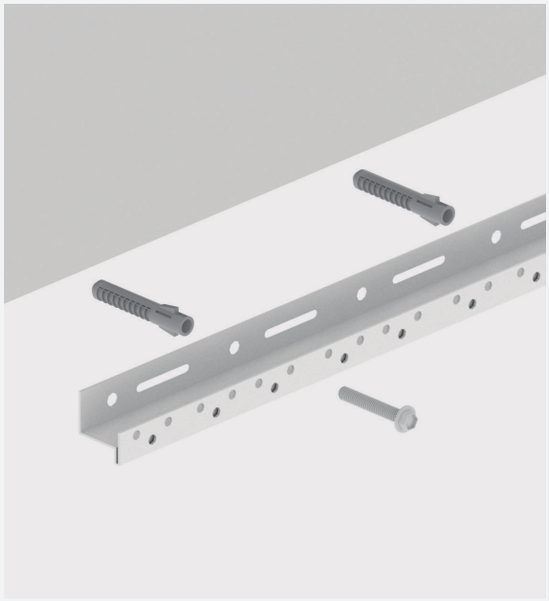

System Detail

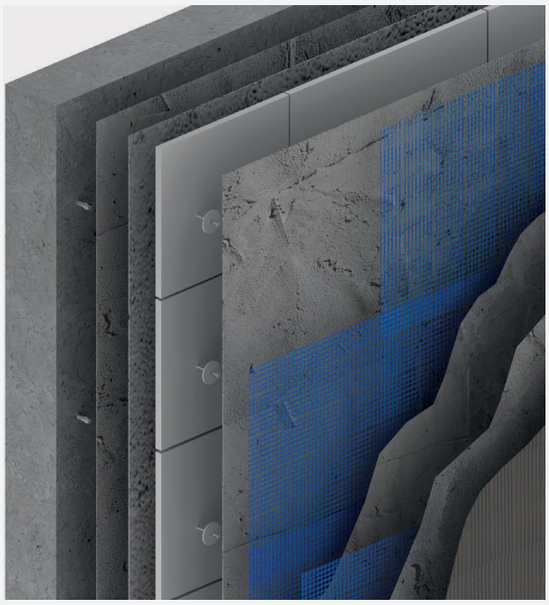

Bottom Slab

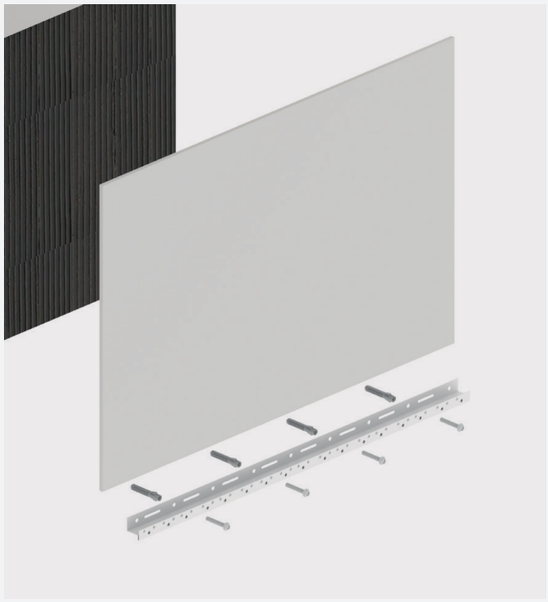

System detail

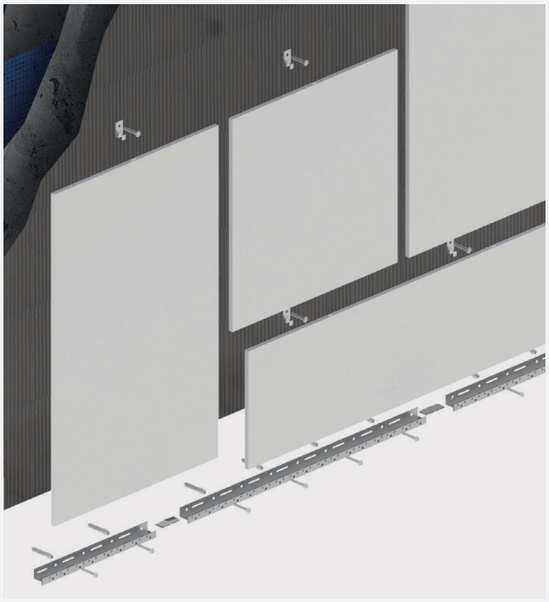

DKS Horizontal section

External corner

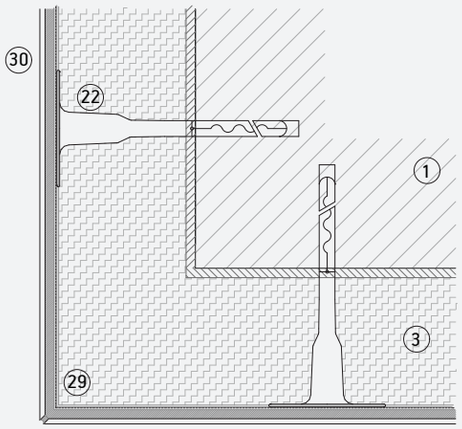

Internal Corner

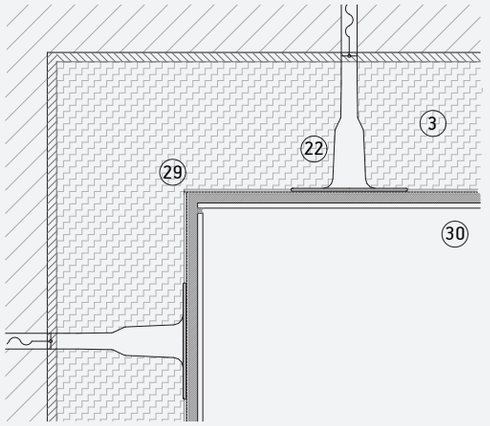

Vertical joint

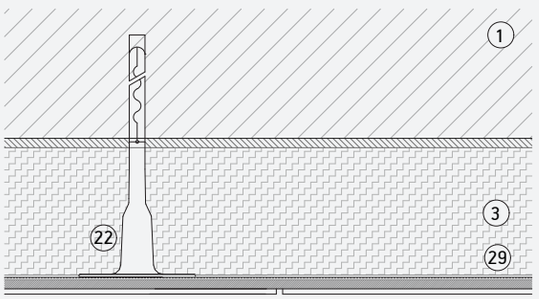

Vertical expansion joint

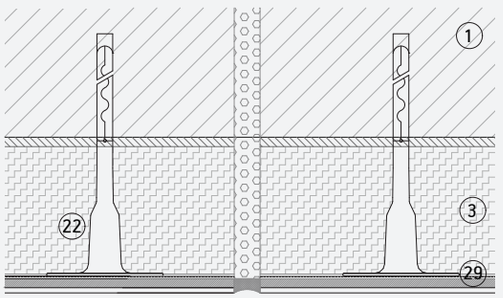

1. Supporting wall.
2. Anchor bracket.
3. Insulation.
4. Insulating layer.
5. Fixed bracket.
6. Adjustable bracket.
7. L profile.
8. T profile.
9. Self tapping screw.
10. Rivet.
11. Undercut anchor.
12. Horizontal rail.
13. C hanger.
14. Adjustable C hanger.
15. Bottom/top edge profile/clip.
16. Intermediate edge profile/clip.
17. Bottom/top visible clip.
18. Intermediate visible clip.
19. Interior back clip
20. Exterior back profile
21. Chemical fixing system
22. Security fixing
23. Ventilation profile
24. Lintel
25. Jamb
26. Window sill
27. Top coping
28. Corner profile
29. Bonding adhesive
30. Dekton

DKS Vertical section

Upper detail

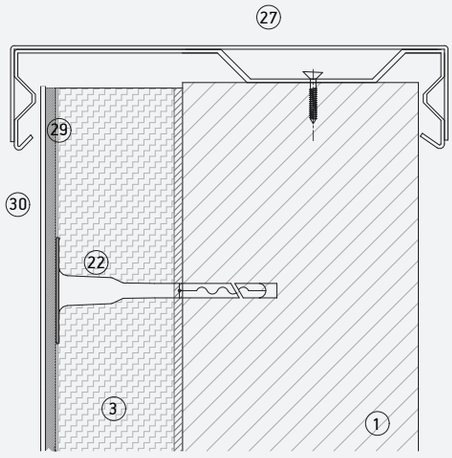

Bottom detail

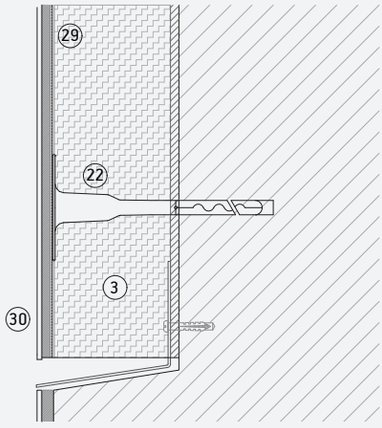

Horizontal joint

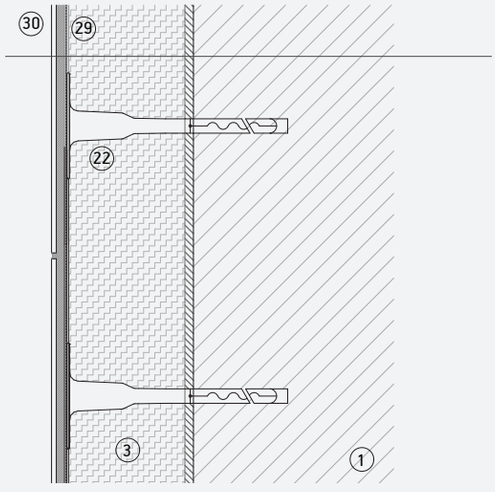

Horizontal profiles joint

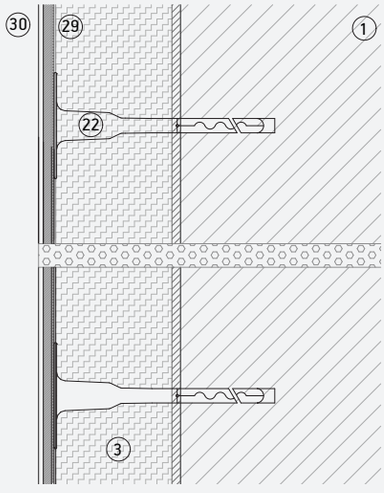

1. Supporting wall.
2. Anchor bracket.
3. Insulation.
4. Insulating layer.
5. Fixed bracket.
6. Adjustable bracket.
7. L profile.
8. T profile.
9. Self tapping screw.
10. Rivet.
11. Undercut anchor.
12. Horizontal rail.
13. C hanger.
14. Adjustable C hanger.
15. Bottom/top edge profile/clip.
16. Intermediate edge profile/clip.
17. Bottom/top visible clip.
18. Intermediate visible clip.
19. Interior back clip
20. Exterior back profile
21. Chemical fixing system
22. Security fixing
23. Ventilation profile
24. Lintel
25. Jamb
26. Window sill
27. Top coping
28. Corner profile
29. Bonding adhesive
30. Dekton

DKS Vertical section

Dekton jamb

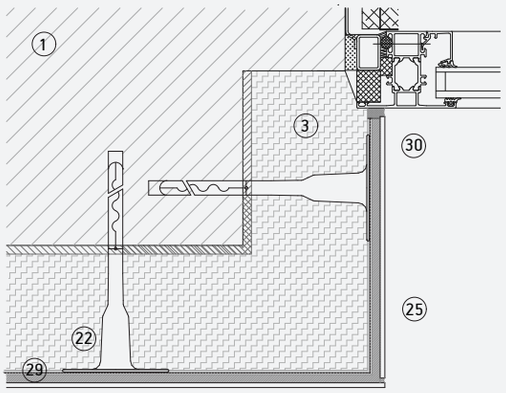

Metallic jamb

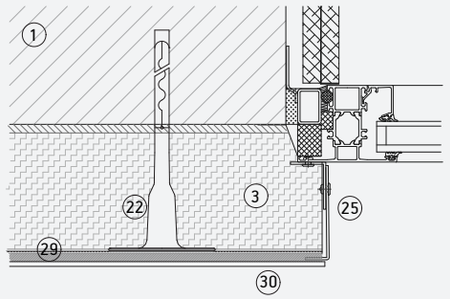

Dekton lintel

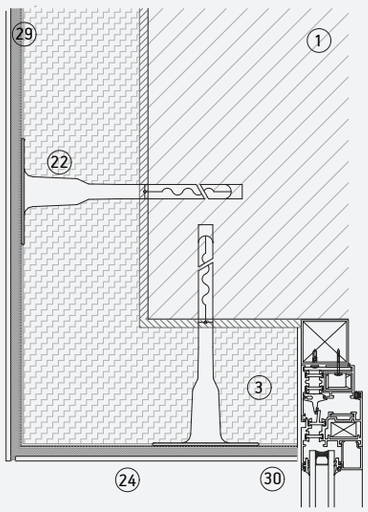

Dekton window sill

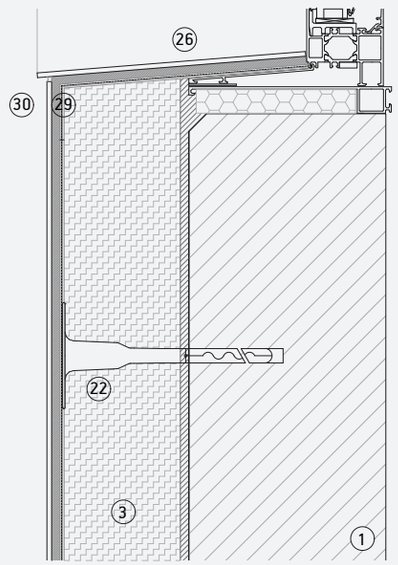

1. Supporting wall.
2. Anchor bracket.
3. Insulation.
4. Insulating layer.
5. Fixed bracket.
6. Adjustable bracket.
7. L profile.
8. T profile.
9. Self tapping screw.
10. Rivet.
11. Undercut anchor.
12. Horizontal rail.
13. C hanger.
14. Adjustable C hanger.
15. Bottom/top edge profile/clip.
16. Intermediate edge profile/clip.
17. Bottom/top visible clip.
18. Intermediate visible clip.
19. Interior back clip
20. Exterior back profile
21. Chemical fixing system
22. Security fixing
23. Ventilation profile
24. Lintel
25. Jamb
26. Window sill
27. Top coping
28. Corner profile
29. Bonding adhesive
30. Dekton

DKS System Description

Dekton® ultra-compact surface by Cosentino, Colour to be defined by the Project Management*. Mineral composition formed by pressing 25,000 Tons (>450 kg/cm) and subsequent sintering at temperatures around 1,200 °C, with useful dimension 3.20x1.44 m, thickness 4 mm without mesh or 8 mm with mesh, incorporating fibreglass mesh 300 g/m² with epoxy resin; reaction to fire Class A1 or A2 s1 d0 [according to EN 13501], unaffected by UV radiation [ΔE < 1 tested in a Xenon chamber at 5000h], with thermal conductivity < 0.5 W/m- °C [according to EN12664], specific heat < 700 J/Kg- °C [measured with DSC], surface resistivity < 65 TΩ/m [at 1000 V] and must have these mechanical-functional characteristics according to EN 10545: Bending strength >55 N/mm. Density > 2,500 Kg/m³ . Porosity < 0.05 %. Linear expansion < 10-6 °C-1. Can be used in outdoor environments, even aggressive ones (petrol, diesel, various solvents) and cleaned with water or other pressurised products, using commercial cleaning products or specific chemical agents (e.g. sulphuric acid, bleach, hydrogen peroxide, acetone, caustic soda) in the case of persistent stains.

Applied as an external thermal insulation system (ETICS) coating, fire classification according to EN:13501 B-S1-d0, consisting of Aluminium Starter Profile. Gluing of EPS/XPS. The sheets will be bonded with adhesive mortar, guaranteeing at all times 100% contact with the surface of the sheet. The pieces are mechanically anchored by nylon plugs with a steel screw and thermally insulated head. The layout and number of fixings will depend on the exposure of the building and its height, with a minimum of 4-5 pcs/m². Placement of corner profiles on edges as reinforcement, as well as in openings, fixed with mortar. Placement of water drip protection in areas of window openings. Installation of the frame profile at the point where the insulation system meets the metalwork. Fitting of a proportional part of the reinforcing mesh in the corner of windows and doors.

The surface of the panels will be covered with a structural gluing reinforced with glass fibre mesh and anti-alkaline treatment and coated with mortar highly malleable and mechanical strength, mixed with glass fibre and rated R2 according to EN 1503-3. Application of Dekton® in a maximum format, to be defined according to the supplier of the ETICS/EIFS system, with resin based adhesive type R2 for Dekton® with mesh and cement based adhesive type C2S2 for Dekton without mesh.

Including, if indicated by the project's Operational Director, visible mechanical safety fixings screwed to the reinforced structural plaster.

Application Limits

Application limits of Dekton® on ETICS/EIFS System:

- Insulation type: EPS, XPS or mineral wool
- Maximum Dekton Slim Protek: 50x150 cm.
- Rendering System:
  1. Rendering Mortar: type R2 En 1503-3.
  2. Glass fibre net: 125 gr/m²
  3. Mechanical metal fixing anchors.
  4. Adhesive mortar (C2 E S2 or R2T EN 12004)
  5. Joint Mortar: CG2 EN 13888.
- Maximum building height: 20 m (6-7 floors)
- Reflection index of tiles: >20%.
- Maximum weight: Dekton + adhesive < 25kg/m²

DKS Structure

DKS - Structure

General fixing instructions

1. Preparation of supporting wall.
2. Positioning of the starting profile.
3. Cutting and preparation of the insulation.
4. Placing the insulation on the wall.
5. Sanding of the entire surface.
6. Positioning of the fixings on the insulation panels.
7. Positioning of the rest of the profiles.
8. Resolution of the singular points.
9. Application of the mortar base and placement of the fibreglass mesh in the regularisation layer.
10. Positioning of the fixings on the fibreglass mesh.
11. Planning of the placement and expansion joints.
12. Placement of the Dekton® pieces.
13. Meeting of the placement joints.
14. Filling the expansion joints.
15. Removal and cleaning of excess material.
16. Final cleaning of the facade.

Fig. 1

Fig. 2

Fig. 3

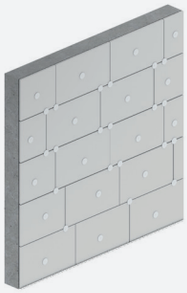

Fig. 4

Fig. 5

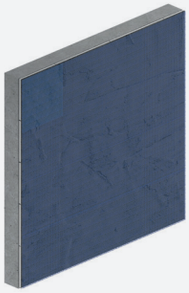

Fig. 6

Fig. 7

Fig. 8

Fig. 9

COSENTINO®

Ctra. Baza a Huércal-Overa, km 59 / 04850
Cantoria - Almería (Spain) / Tel.: +34 950 444 175
info@cosentino.com / www.cosentino.com

* To obtain more information about colours with an NSF certificate please visit www.nsf.org

REV. 00 - 08/2021